Customer approval :

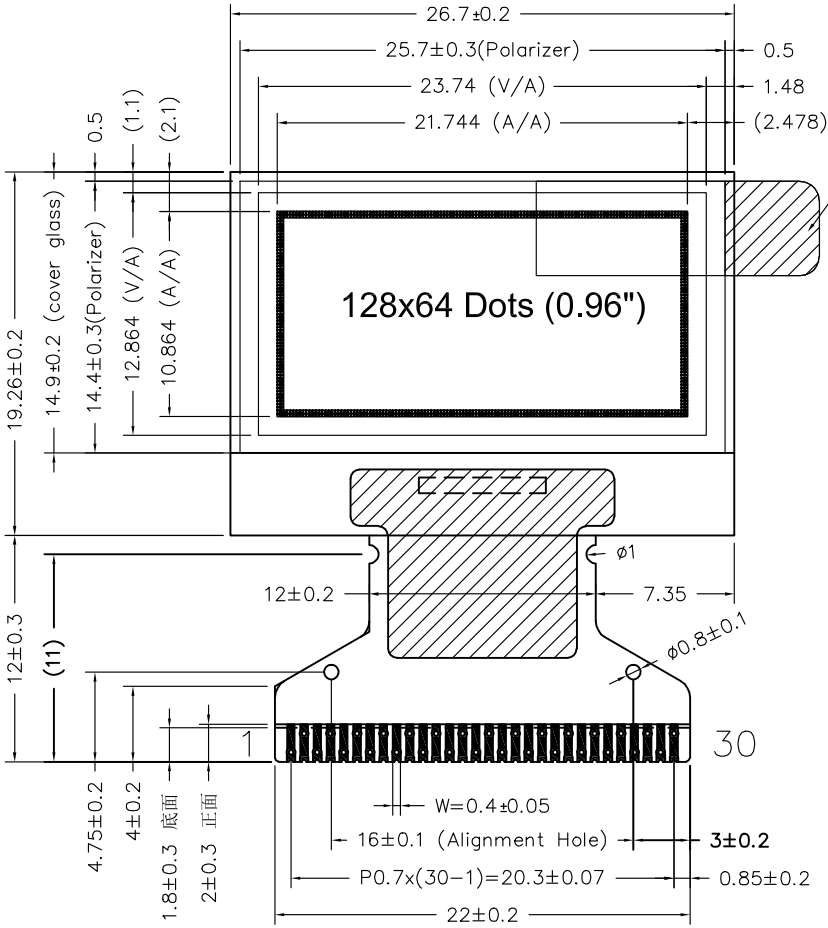

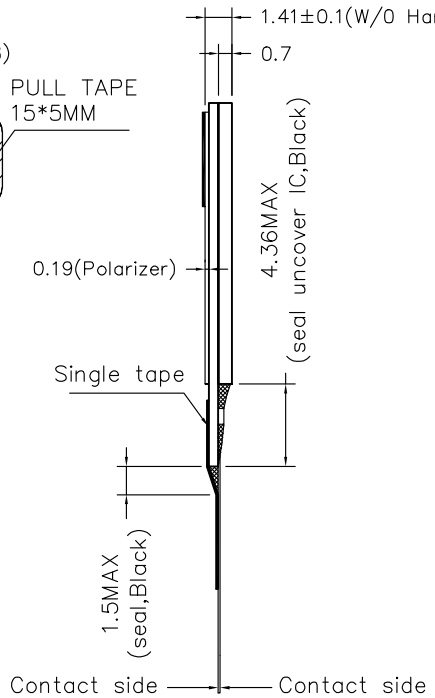

Reference Only

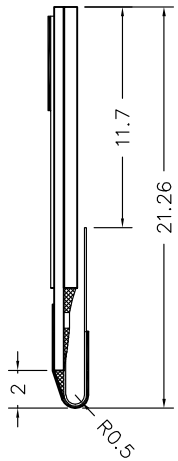

PIN	SYMBOL
1	NC(GND)
2	C2P
3	C2N
4	C1P
5	C1N
6	VBAT
7	NC
8	VSS
9	VDD
10	BS0
11	BS1
12	BS2
13	CS#
14	RES#
15	D/C#
16	R/W#
17	E#
18	D0
19	D1
20	D2
21	D3
22	D4
23	D5
24	D6
25	D7
26	IREF
27	VCOMH
28	VCC
29	VLSS
30	NC(GND)

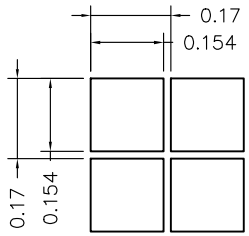

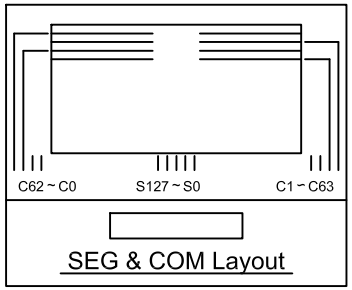

Specifications:

1. Display : OLED(BLUE).
2. Dot Matrix: 128*64
3. Dot Size: 0.154*0.154mm
4. Dot Pitch: 0.17*0.17mm
5. Aperture Rate: 78%
6. Active Area : 21.744*10.864mm
7. Drive IC: SSD1306

REV	REVISION RECORD	DATE					
A	FIRST ISSUE	2017/08/08	TCC® 深圳市三元晶科技有限公司 ShenZhen TCCLCD HI- Tech Co., Ltd.				
B			MODEL NO. 模组型号	SYO12864B05-3C135BN2-WCE		GENERAL TOL: 未 注 公 差	± 0.3
C			APPROVED BY 审核	CHECKED BY 检查	DRAWING BY 绘图	PAGE: 页面 1 OF 2	UNIT: 单位mm
D			Liu 2017/08/08	Francis 2017/08/08	Luoxian 2017/08/08	PROJECTION 三 角 法	

Customer approval :

8080 INTERFACE

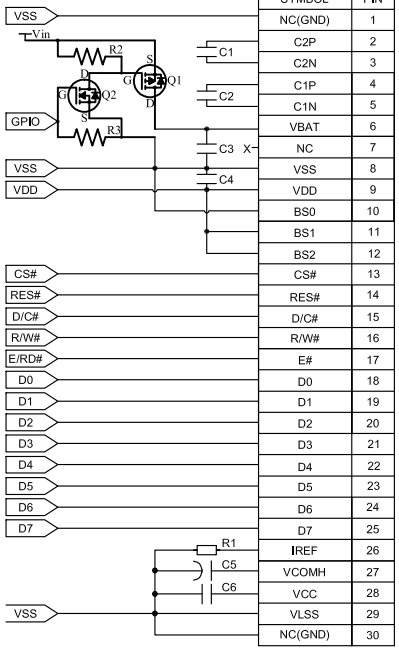

SYMBOL	PIN
NC(GND)	1
C2P	2
C2N	3
C1P	4
C1N	5
VBAT	6
NC	7
VSS	8
VDD	9
BS0	10
BS1	11
BS2	12
CS#	13
RES#	14
D/C#	15
R/W#	16
E#	17
D0	18
D1	19
D2	20
D3	21
D4	22
D5	23
D6	24
D7	25
IREF	26
VCOMH	27
VCC	28
VLSS	29
NC(GND)	30

C1,C2,C3,C4: 1uF/16V
C5: 4.7uF/25V(Tantalum type)
C6: 2.2uF/25V
R1: 620KΩ±1%
R2,R3: 47KΩ
Q1: FDN338P
Q2: FDN335N

6800 INTERFACE

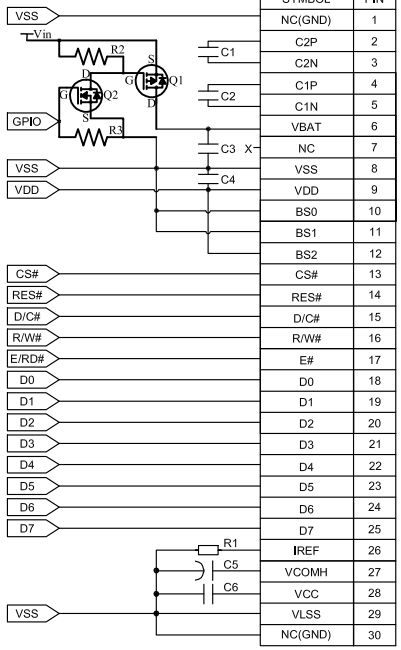

SYMBOL	PIN
NC(GND)	1
C2P	2
C2N	3
C1P	4
C1N	5
VBAT	6
NC	7
VSS	8
VDD	9
BS0	10
BS1	11
BS2	12
CS#	13
RES#	14
D/C#	15
R/W#	16
E#	17
D0	18
D1	19
D2	20
D3	21
D4	22
D5	23
D6	24
D7	25
IREF	26
VCOMH	27
VCC	28
VLSS	29
NC(GND)	30

C1,C2,C3,C4: 1uF/16V
C5: 4.7uF/25V(Tantalum type)
C6: 2.2uF/25V
R1: 620KΩ±1%
R2,R3: 47KΩ
Q1: FDN338P
Q2: FDN335N

4SPI INTERFACE

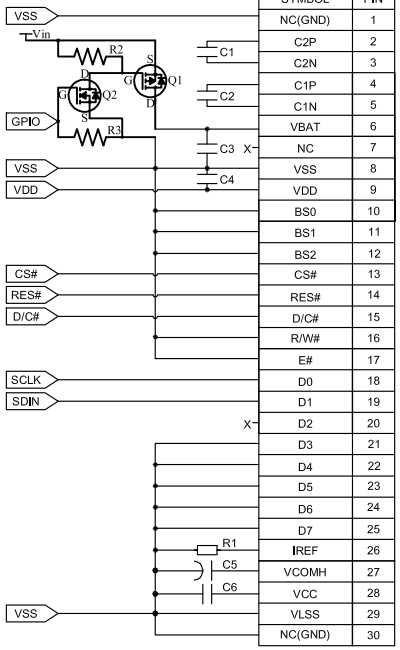

SYMBOL	PIN
NC(GND)	1
C2P	2
C2N	3
C1P	4
C1N	5
VBAT	6
NC	7
VSS	8
VDD	9
BS0	10
BS1	11
BS2	12
CS#	13
RES#	14
D/C#	15
R/W#	16
E#	17
D0	18
D1	19
D2	20
D3	21
D4	22
D5	23
D6	24
D7	25
IREF	26
VCOMH	27
VCC	28
VLSS	29
NC(GND)	30

C1,C2,C3,C4: 1uF/16V
C5: 4.7uF/25V(Tantalum type)
C6: 2.2uF/25V
R1: 620KΩ±1%
R2,R3: 47KΩ
Q1: FDN338P
Q2: FDN335N

I2C INTERFACE

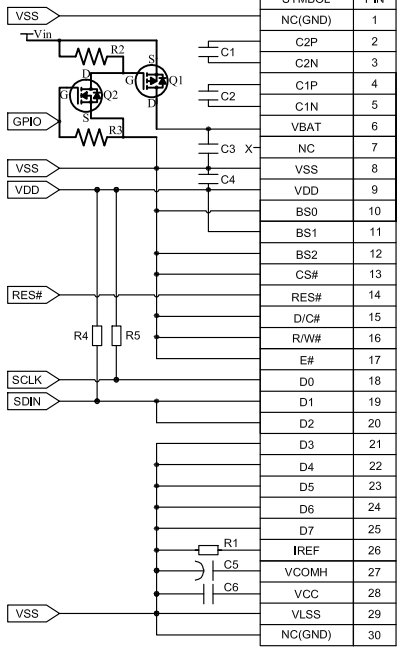

SYMBOL	PIN
NC(GND)	1
C2P	2
C2N	3
C1P	4
C1N	5
VBAT	6
NC	7
VSS	8
VDD	9
BS0	10
BS1	11
BS2	12
CS#	13
RES#	14
D/C#	15
R/W#	16
E#	17
D0	18
D1	19
D2	20
D3	21
D4	22
D5	23
D6	24
D7	25
IREF	26
VCOMH	27
VCC	28
VLSS	29
NC(GND)	30

C1,C2,C3,C4: 1uF/16V
C5: 4.7uF/25V(Tantalum type)
C6: 2.2uF/25V
R1: 620KΩ±1%
R2,R3: 47KΩ
R4,R5: 4.7KΩ
Q1: FDN338P
Q2: FDN335N

REV	REVISION RECORD	DATE
A	FIRST ISSUE	2017/08/08
B		
C		
D		

深圳市三元晶科技有限公司
ShenZhen TCCLCD HI- Tech Co., Ltd.

MODEL NO. 模组型号	SYO12864B05-3C135BN2-WCE		GENERAL TOL: 未 注 公 差	± 0.3
APPROVED BY 审核	CHECKED BY 检查	DRAWING BY 绘图	PAGE: 页面 2 OF 2	UNIT: 单位mm
Liu 2017/08/08	Francis 2017/08/08	Luoxian 2017/08/08	PROJECTION 三 角 法	