Customer approval :

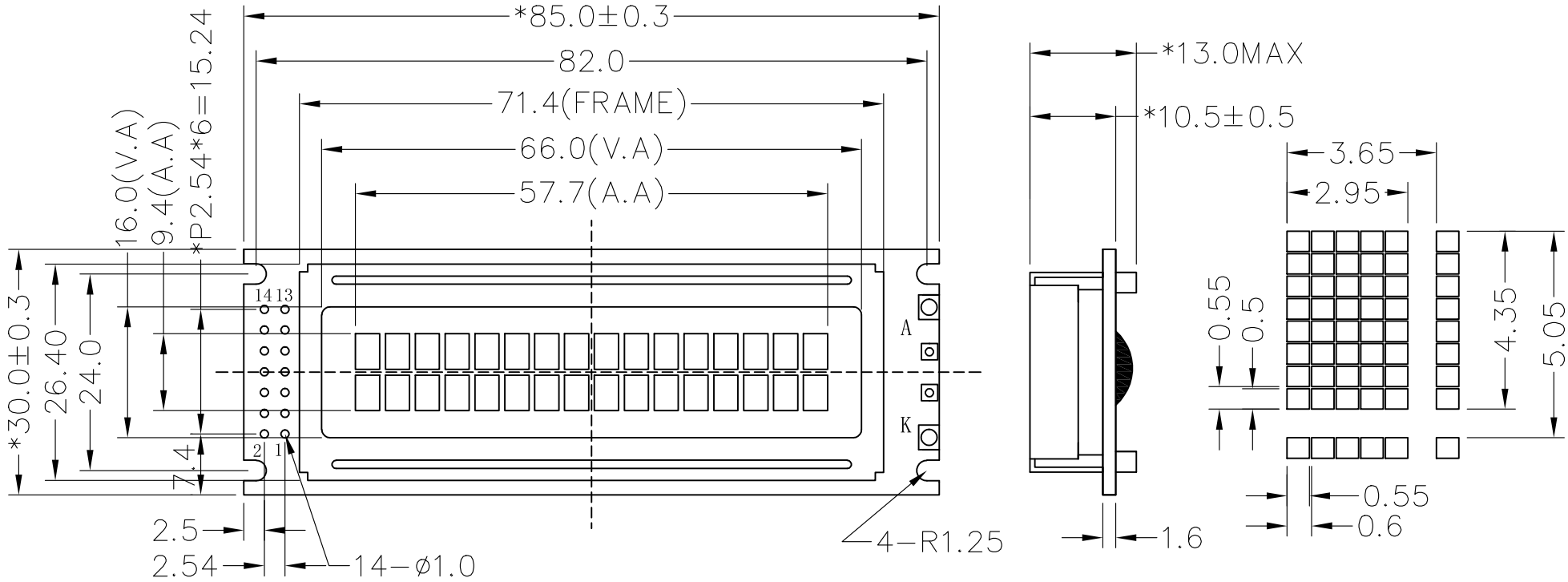

DOT SIZE SCALE 5:1

SPECIFICATION:

1). Driving: Duty:1/16, Bias:1/5, Vdd:5.0V, Vlcd:4.5V
2). VIEWING DIRECTION: 6 O'CLOCK
3). Display mode: STN/Positive/Transflective/Y-G
4). Operating temp.:-20°C~+70°C
5). Storage temp.: -30°C~+80°C
6). Control IC: SPLC780D1(Or Compatible)
7). BACKLIGHT: Edge,Y-G
8). DIMENSIONS WITH MARK "*" ARE IMPORTANT
WITH MARK "()" ARE REFERENCED
9). All the raw materials are RoHS compliant

1	2	3	4	5	6	7	8	9	10	11	12	13	14
VDD	VSS	Vo	RS	R/W	E	DB0	DB1	DB2	DB3	DB4	DB5	DB6	DB7

REVISION RECORD	REV
First issue	A0

TCC® 深圳市三元晶科技有限公司
ShenZhen TCC LCD Hi-Tech Co,. Ltd

DRAWING NO.	SYB1602DV11-5C10YL3N2-B5WG	GENERAL TOL:	± 0.2
APPROVED BY	CHECKED BY	DRAWING BY	UNIT: mm	PAGE
Liu 2012/02/27	Francis 2012/02/27	Luoxian 2012/02/27	1/1